Measurement principle

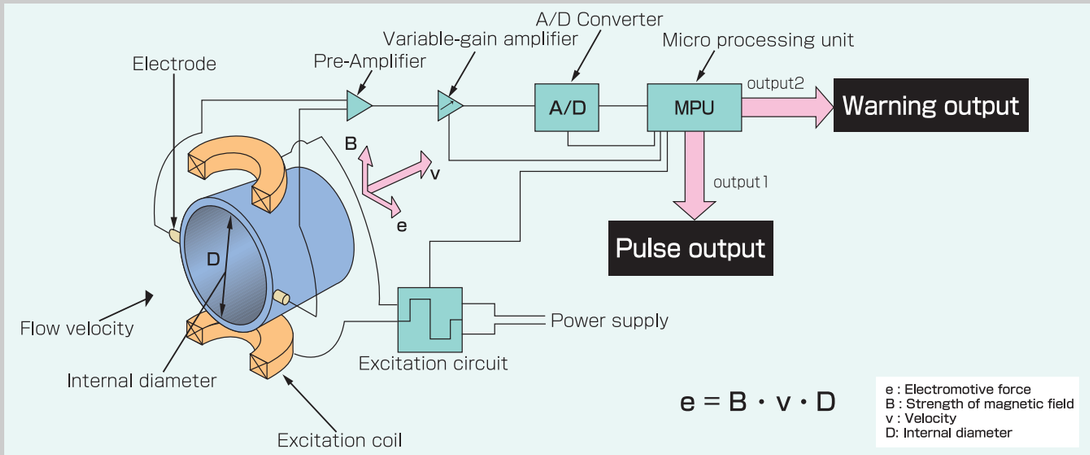

Accuracy

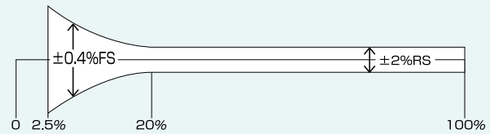

Examples of use

Coolant monitoring in molding machines / welding machines

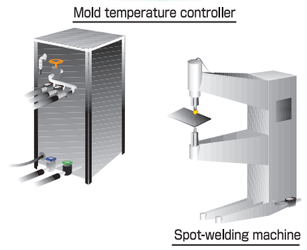

Feedback control in pump system

Medical divices

External dimensions

Unit : mm

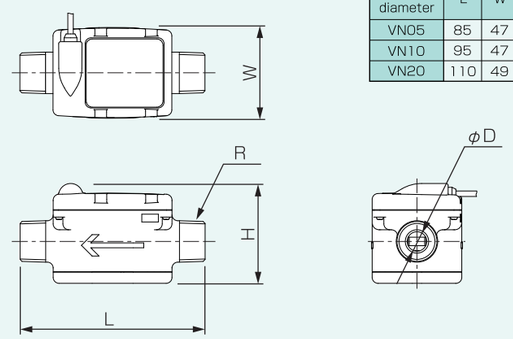

Nominal diameter	L	W	H	φD	R
VN05	85	47	49	5.2	1/4"
VN10	95	47	52	10	1/2"
VN20	110	49	62	20	1"

Fuel cell system

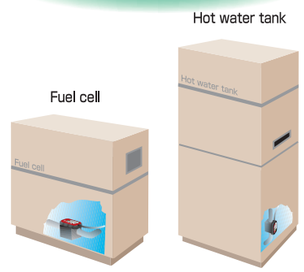

Aichi Tokei Denki Co., Ltd.

No. 2 - 70, Chitose 1 - chome,
Atsuta - ku, Nagoya 456 - 8691
Japan
Tel : +81-52-661-5150
Fax : +81-52-661-6418
https://www.aichitokei.co.jp/eng/index.html
E-mail: overseas@inet1.aichitokei.co.jp

Specifications are subject to change without notice.
Printed in Japan (11/06)

VN Series

Small Electromagnetic Flow Sensor

- **Compact and excellent cost performance**
- **Outstanding reliability with no moving parts**
- **Suitable for use in machines**
- **Easy-to-check 2-color LED(status) indicator**

Overview

Model		VN 05	VN 10	VN 20
Flow range		0.05 to 1L/min	0.5 to 10L/min	3 to 60L/min
Connection		R1/4"	R1/2"	R1"
Accuracy	Unit pulse	±2% RS (100%～20% of the upper limit of the accuracy guaranteedflow-rate range) ±0.4% FS (20%～5% of the upper limit of the accuracy guaranteedflow-rate range)		
	High density pulse	±2.5% RS (100%～20% of the upper limit of the accuracy guaranteedflow-rate range) ±0.5% FS (20%～5% of the upper limit of the accuracy guaranteedflow-rate range)		
Output		2 open collector outputs*		
Fluid conductivity		50μS/cm and above		
Liquid temperature		0 to 60℃		
Maximum operation pressure		1 MPa at 25℃		
Enclosure		IP64		
Power supply		12-24 V DC 100mA		
Electrodes		SUS316L		
Sensor weight (approx.)		200g	200g	300g

* Possible to output two of the following: unit pulse, high density pulse, warning, and switch

Aichi Tokei Denki Co., Ltd.